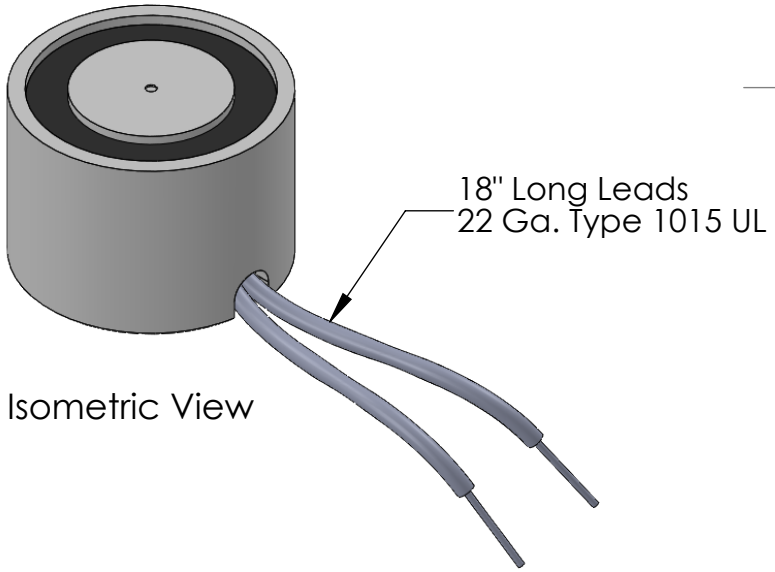

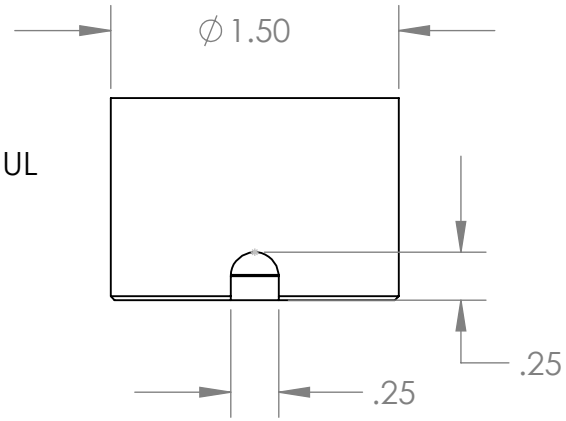

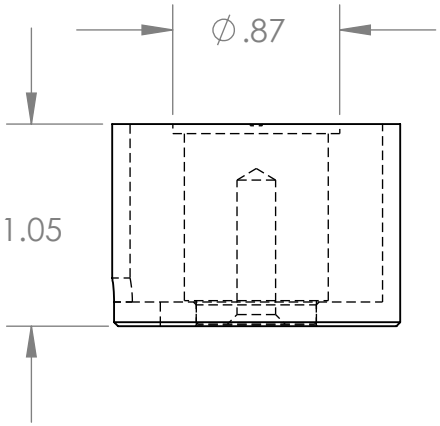

Electrical Specifications

Voltage:	24 VDC
Duty Cycle:	Continuous
Resistance:	96 ohms ± 10% (@ 20c)
Amps @ rated Volts:	0.25
Watts @ rated Volts:	6
Holding:	88 lbs (1/4" Thick 1215 CRS @ 20c)
Operating Temp:	-40c to 60c (range)

Additional Components

Screw:	N/A
Spring:	N/A
Spiral Pin:	N/A
Potting:	United Resin Corp. (El-cast Black)
Finish:	Housing - Zinc or Electroless Nickel Plating (0.0002-0.0003")

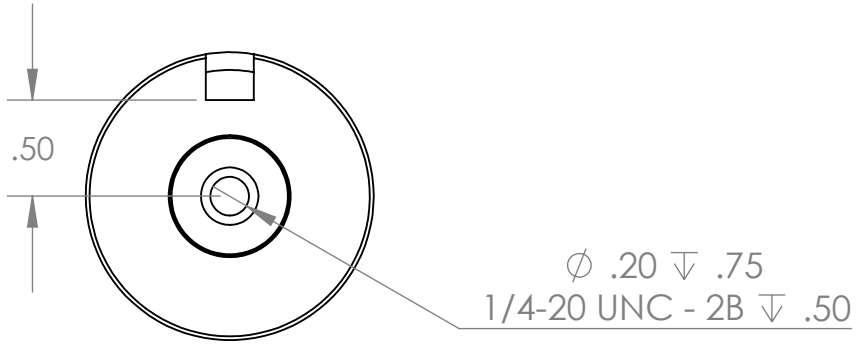

Client	Client P/N
NEXT ASSY	USED ON
APPLICATION	

UNLESS OTHERWISE SPECIFIED:

DIMENSIONS ARE IN INCHES
TOLERANCES:
FRACTIONAL ± .010
ANGULAR: MACH ± BEND ±
TWO PLACE DECIMAL ±.005
THREE PLACE DECIMAL ±.003

Break Sharp edges 0.002" unles otherwise noted

MATERIAL

FINISH

DO NOT SCALE DRAWING

	NAME	DATE
DRAWN	D.P.	01.16.24
CHECKED		
ENG APPR.		
MFG APPR.		
Q.A.		

COMMENTS:

APW COMPANY

TITLE:

P/N: EM150-24-212-A

SIZE	DWG. NO.	REV
A	6639	

SCALE: 1:1 | WEIGHT: | SHEET 1 OF 1

PROPRIETARY AND CONFIDENTIAL

THE INFORMATION CONTAINED IN THIS DRAWING IS THE SOLE PROPERTY OF APW COMPANY. ANY REPRODUCTION IN PART OR AS A WHOLE WITHOUT THE WRITTEN PERMISSION OF APW COMPANY IS STRICLY PROHIBITED.

5 4 3 2 1