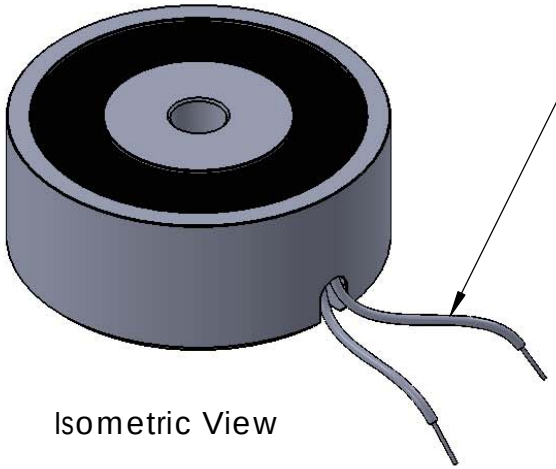

Isometric View

18" Long Leads
18 Ga. Type 1015 UL

Center Post Recessed
(.003-.005)
Quick Release

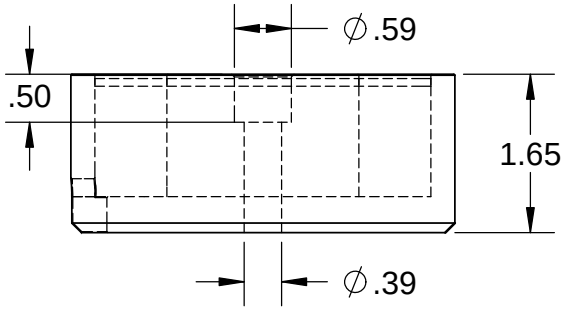


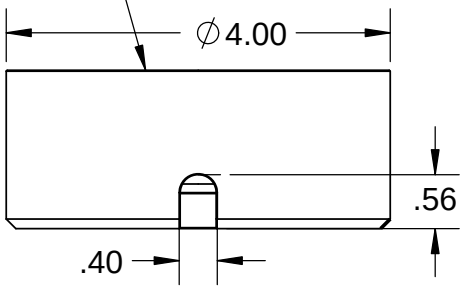


## Electrical Specifications

| | |
|---|---|
| ***Voltage:*** | 220 VDC |
| ***Duty Cycle:*** | Continuous |
| ***Resistance:*** | 2550 ohms ± 10% (@ 20c) |
| ***Amps @ rated Volts:*** | 0.09 |
| ***Watts @ rated Volts:*** | 20.0 |
| ***Holding:*** | 480 lbs (1/4" Thick 1215 CRS @ 20c) |
| ***Operating Temp:*** | -40c to 60c (range) |

## Additional Components

| | |
|---|---|
| ***Screw:*** | 3/8-16 x 1 3/4" Long (Hex Socket Head Cap) w/Nylok |
| ***Spring:*** | N/A |
| ***Spiral Pin:*** | N/A |
| ***Potting:*** | United Resin Corp. (El-cast Black) |
| ***Finish:*** | Housing - Zinc or Electroless Nickel Plating (0.0002-0.0003") |

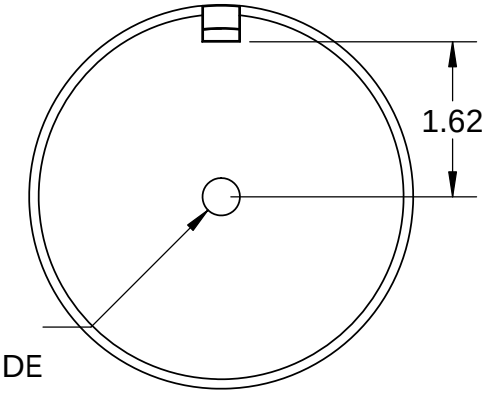


∅ .39 THRU ALL
⌴ ∅ .59 ↧ .50
∨ ∅ .65 X 90°, NEAR SIDE

**PROPRIETARY AND CONFIDENTIAL**

THE INFORMATION CONTAINED IN THIS DRAWING IS THE SOLE PROPERTY OF APW COMPANY. ANY REPRODUCTION IN PART OR AS A WHOLE WITHOUT THE WRITTEN PERMISSION OF APW COMPANY IS PROHIBITED.

| NEXT ASSY | USED ON |
|---|---|
| APPLICATION | |

UNLESS OTHERWISE SPECIFIED:

DIMENSIONS ARE IN INCHES
TOLERANCES:
FRACTIONAL ± .015
ANGULAR: MACH ± 2 BEND ± 2
TWO PLACE DECIMAL ± .005
THREE PLACE DECIMAL ± .003

INTERPRET GEOMETRIC TOLERANCING PER: ANSI

MATERIAL

FINISH

DO NOT SCALE DRAWING

| | NAME | DATE |
|---|---|---|
| DRAWN | K.H. | 06.17.11 |
| CHECKED | J.K. | 06.17.11 |
| ENG APPR. | J.K. | 06.17.11 |
| MFG APPR. | J.K. | 06.17.11 |
| Q.A. | | |

COMMENTS:

APW COMPANY

TITLE:

P/N: EM400-220-112

| SIZE | DWG. NO. | REV |
|---|---|---|
| A | 5555 | |

SCALE: 1:2 | WEIGHT: | SHEET 1 OF 1

5 4 3 2 1