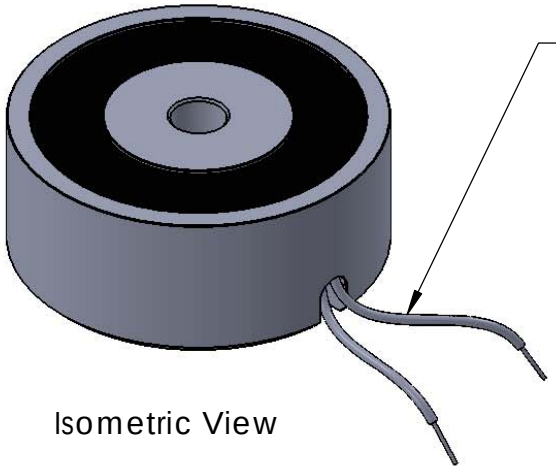

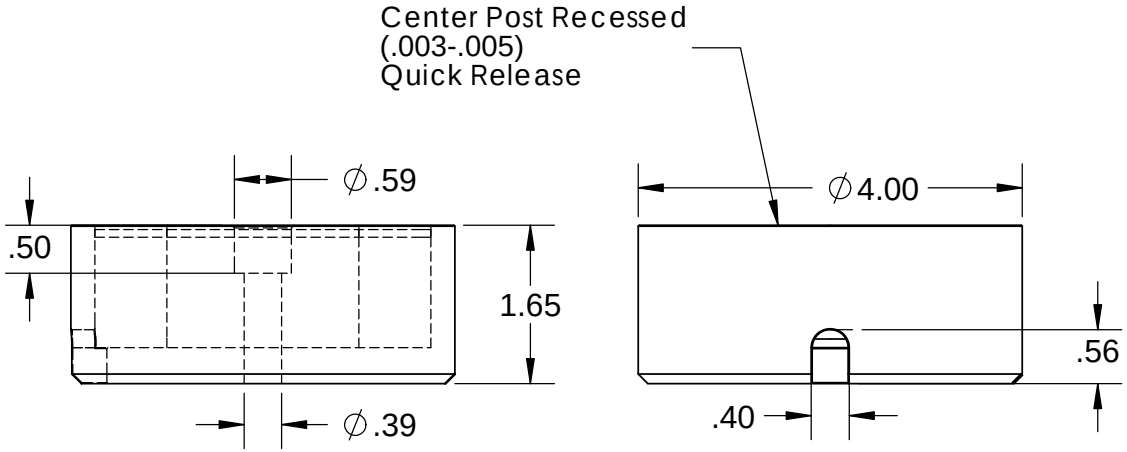

Electrical Specifications

Voltage:	115 VAC
Duty Cycle:	Continuous
Resistance:	500 ohms ± 10% (@ 20c)
Amps @ rated Volts:	0.17
Watts @ rated Volts:	20.0
Holding:	480 lbs (1/4" Thick 1215 CRS @ 20c)
Operating Temp:	-40c to 60c (range)

Additional Components

Screw:	3/8-16 x 1 3/4" Long (Hex Socket Head Cap) w/Nylok
Spring:	N/A
Spiral Pin:	N/A
Potting:	United Resin Corp. (El-cast Black)
Finish:	Housing - Zinc or Electroless Nickel Plating (0.0002-0.0003")

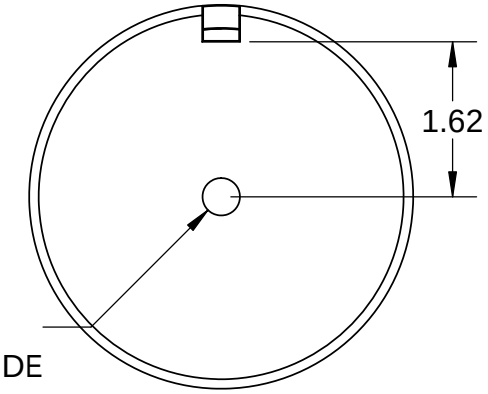

∅ .39 THRU ALL
⌴ ∅ .59 ↧ .50
∨ ∅ .65 X 90°, NEAR SIDE

PROPRIETARY AND CONFIDENTIAL

THE INFORMATION CONTAINED IN THIS DRAWING IS THE SOLE PROPERTY OF APW COMPANY. ANY REPRODUCTION IN PART OR AS A WHOLE WITHOUT THE WRITTEN PERMISSION OF APW COMPANY IS PROHIBITED.

NEXT ASSY	USED ON
APPLICATION	

UNLESS OTHERWISE SPECIFIED:

DIMENSIONS ARE IN INCHES
TOLERANCES:
FRACTIONAL ± .015
ANGULAR: MACH ± 2 BEND ± 2
TWO PLACE DECIMAL ± .005
THREE PLACE DECIMAL ± .003

INTERPRET GEOMETRIC TOLERANCING PER: ANSI

MATERIAL

FINISH

DO NOT SCALE DRAWING

	NAME	DATE
DRAWN	K.H.	06.17.11
CHECKED	J.K.	06.17.11
ENG APPR.	J.K.	06.17.11
MFG APPR.	J.K.	06.17.11
Q.A.		

COMMENTS:

APW COMPANY

TITLE:

P/N: EM400-115ac-112

SIZE	DWG. NO.	REV
A	5554	
SCALE: 1:2	WEIGHT:	SHEET 1 OF 1

5 4 3 2 1