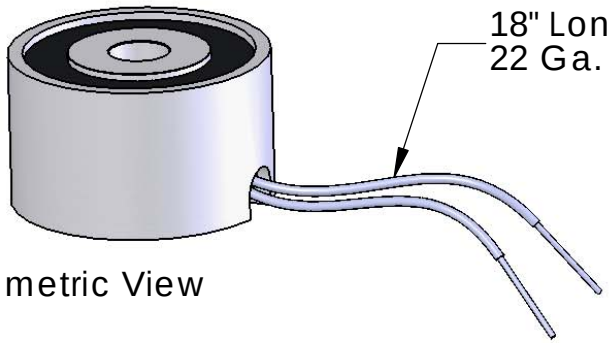

Isometric View

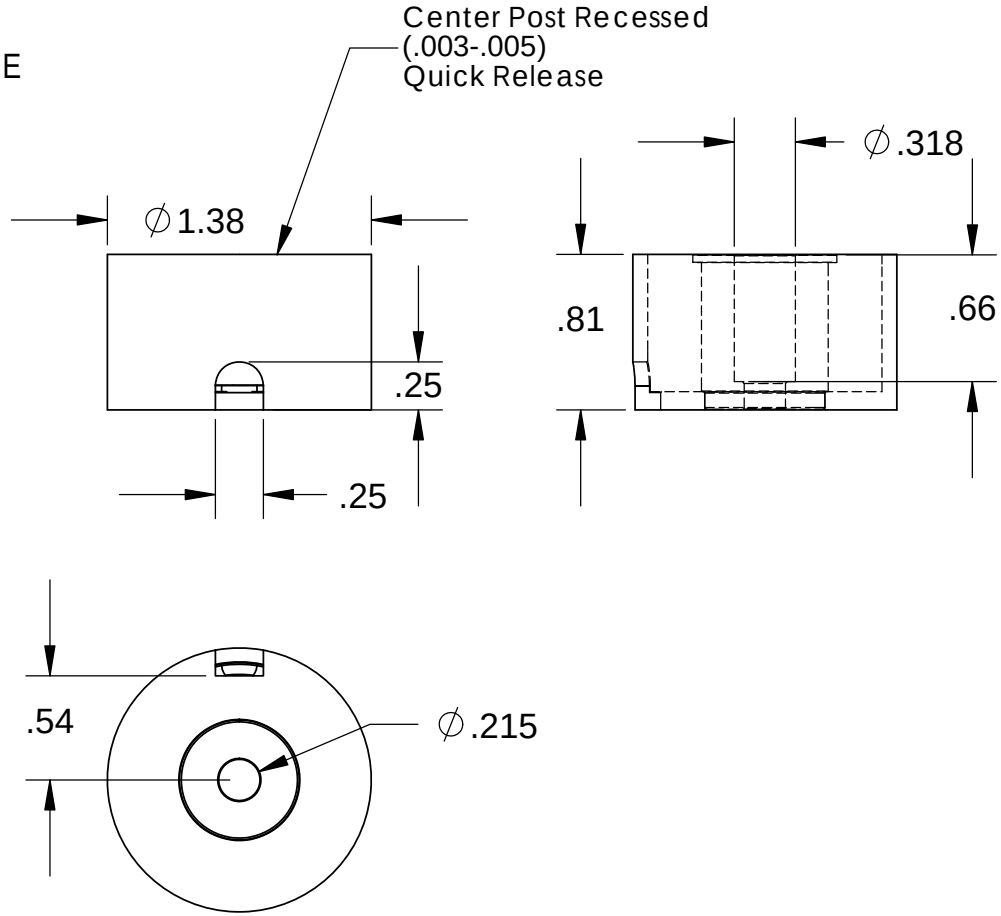

Electrical Specifications

Voltage:	6 VDC
Duty Cycle:	Continuous
Resistance:	9.5 ohms ± 10% (@ 20c)
Amps @ rated Volts:	0.83
Watts @ rated Volts:	5.0
Holding:	33 lbs (1/4" Thick 1215 CRS @ 20c)
Operating Temp:	-40c to 60c (range)

Additional Components

Screw:	10-32 x 13/16" Long (Hex Socket Head Cap) w/Nylok
Spring:	N/A
Spiral Pin:	N/A
Potting:	N/A

Finish:	Housing - Zinc or Electroless Nickel Plating (0.0002-0.0003")

PROPRIETARY AND CONFIDENTIAL

THE INFORMATION CONTAINED IN THIS DRAWING IS THE SOLE PROPERTY OF APW COMPANY. ANY REPRODUCTION IN PART OR AS A WHOLE WITHOUT THE WRITTEN PERMISSION OF APW COMPANY IS PROHIBITED.

NEXT ASSY	USED ON
APPLICATION	

UNLESS OTHERWISE SPECIFIED:

DIMENSIONS ARE IN INCHES
TOLERANCES:
FRACTIONAL ± .015
ANGULAR: MACH ± 2 BEND ± 2
TWO PLACE DECIMAL ± .005
THREE PLACE DECIMAL ± .003

INTERPRET GEOMETRIC TOLERANCING PER: ANSI

MATERIAL

FINISH

DO NOT SCALE DRAWING

	NAME	DATE
DRAWN	K.H.	07.20.11
CHECKED	J.K.	07.20.11
ENG APPR.	J.K.	07.20.11
MFG APPR.	J.K.	07.20.11
Q.A.		

COMMENTS:

APW COMPANY

TITLE:

P/N: EM137-6-122

SIZE	DWG. NO.	REV
A	5482	

SCALE: 1:1 | WEIGHT: | SHEET 1 OF 1

5 4 3 2 1