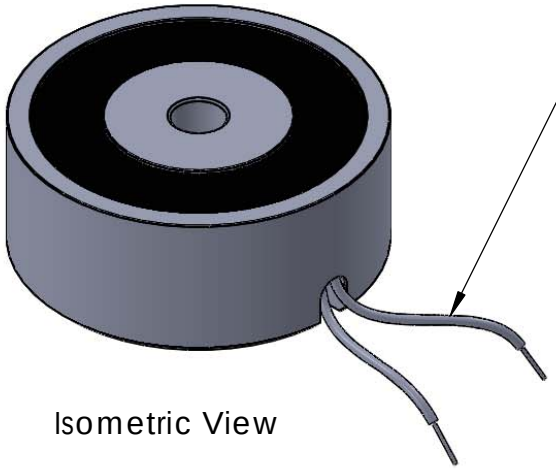

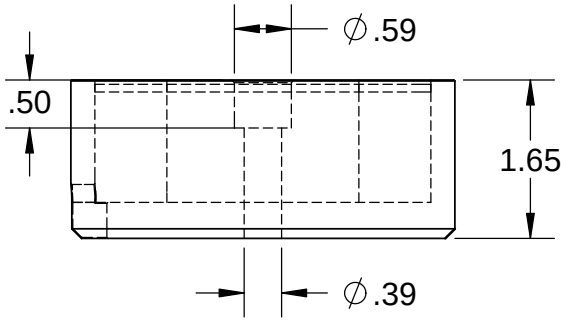

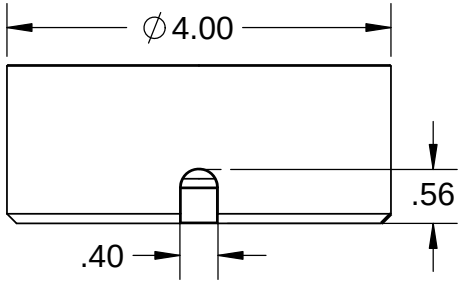

Electrical Specifications

Voltage:	12 VDC
Duty Cycle:	Continuous
Resistance:	7.8 ohms ± 10% (@ 20c)
Amps @ rated Volts:	1.67
Watts @ rated Volts:	20.0
Holding:	640 lbs (1/4" Thick 1215 CRS @ 20c)
Operating Temp:	-40c to 60c (range)

Additional Components

Screw:	3/8-16 x 1 3/4" Long (Hex Socket Head Cap) w/Nylok
Spring:	N/A
Spiral Pin:	N/A
Potting:	United Resin Corp. (El-cast Black)
Finish:	Housing - Zinc or Electroless Nickel Plating (0.0002-0.0003")

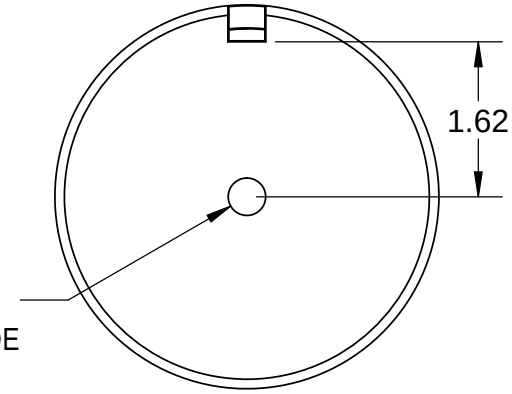

		UNLESS OTHERWISE SPECIFIED:		NAME	DATE
		DIMENSIONS ARE IN INCHES TOLERANCES: FRACTIONAL± .015 ANGULAR: MACH± 2 BEND ± 2 TWO PLACE DECIMAL ± .005 THREE PLACE DECIMAL ± .003	DRAWN	K.H.	06.17.11
			CHECKED	J.K.	06.17.11
			ENG APPR.	J.K.	06.17.11
			MFG APPR.	J.K.	06.17.11
		INTERPRET GEOMETRIC TOLERANCING PER: ANSI	Q.A.		
		MATERIAL	COMMENTS:		
NEXT ASSY	USED ON	FINISH			
APPLICATION		DO NOT SCALE DRAWING			

PROPRIETARY AND CONFIDENTIAL

THE INFORMATION CONTAINED IN THIS DRAWING IS THE SOLE PROPERTY OF APW COMPANY. ANY REPRODUCTION IN PART OR AS A WHOLE WITHOUT THE WRITTEN PERMISSION OF APW COMPANY IS PROHIBITED.

APW COMPANY

TITLE:

P/N: EM400-12-212

SIZE	DWG. NO.	REV
A	4839	
SCALE: 1:2	WEIGHT:	SHEET 1 OF 1

5 4 3 2 1