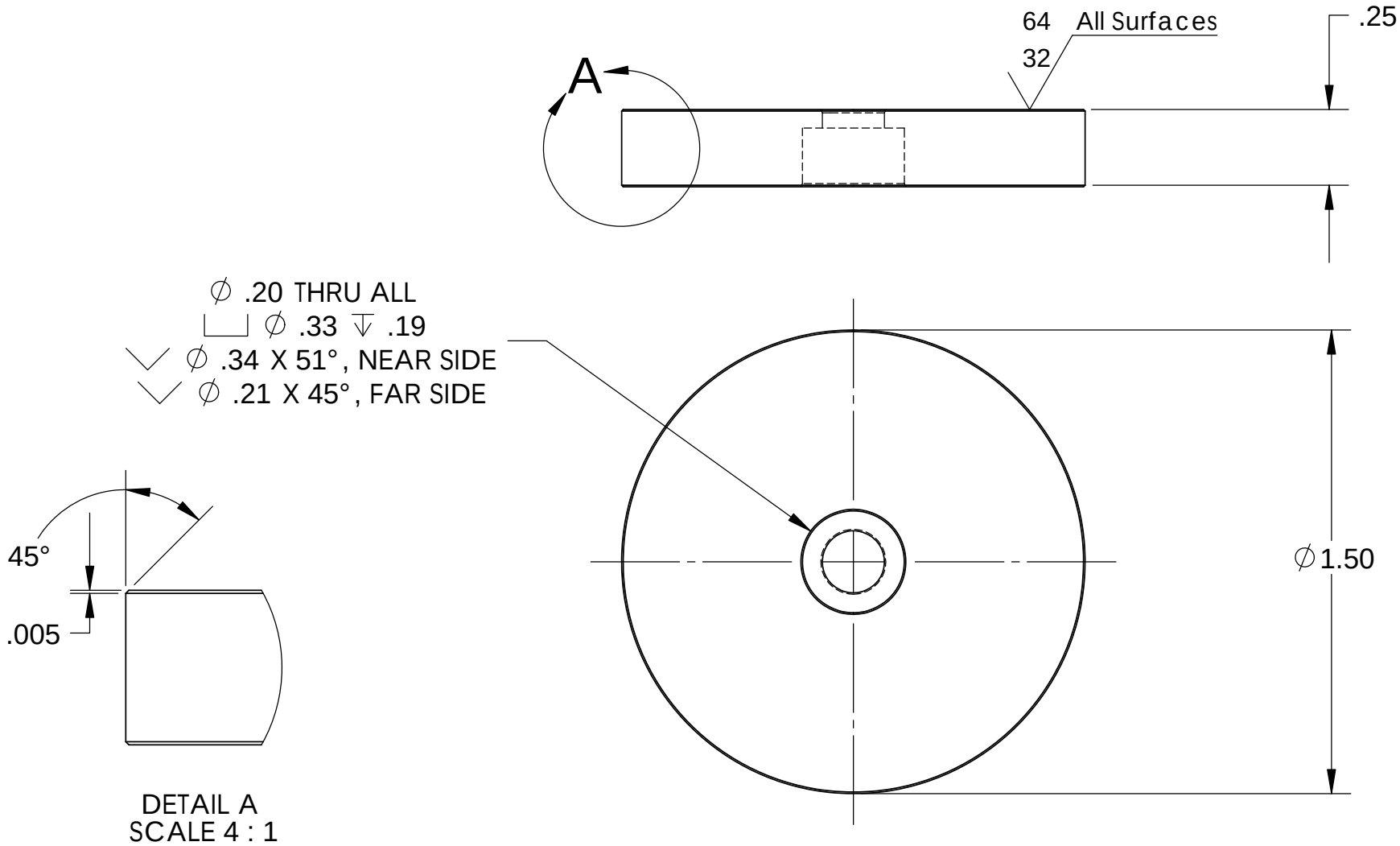

		UNLESS OTHERWISE SPECIFIED:		NAME	DATE
		DIMENSIONS ARE IN INCHES TOLERANCES: FRACTIONAL ± .015 ANGULAR: MACH ± 2 BEND ± 2 TWO PLACE DECIMAL ± .005 THREE PLACE DECIMAL ± .003	DRAWN	J.K.	06.29.07
			CHECKED	A.P.	06.29.07
			ENG APPR.	J.K.	06.29.07
			MFG APPR.		
		INTERPRET GEOMETRIC TOLERANCING PER: ANSI	Q.A.		
		MATERIAL 1215 CRS	COMMENTS:		
NEXT ASSY	USED ON	FINISH			
APPLICATION		DO NOT SCALE DRAWING			

PROPRIETARY AND CONFIDENTIAL

THE INFORMATION CONTAINED IN THIS DRAWING IS THE SOLE PROPERTY OF APW COMPANY. ANY REPRODUCTION IN PART OR AS A WHOLE WITHOUT THE WRITTEN PERMISSION OF APW COMPANY IS PROHIBITED.

APW COMPANY

TITLE:

EM150 Strike Plate

SIZE	DWG. NO.	REV
A	SP-150	
SCALE: 1:1	WEIGHT:	SHEET 1 OF 1

5 4 3 2 1